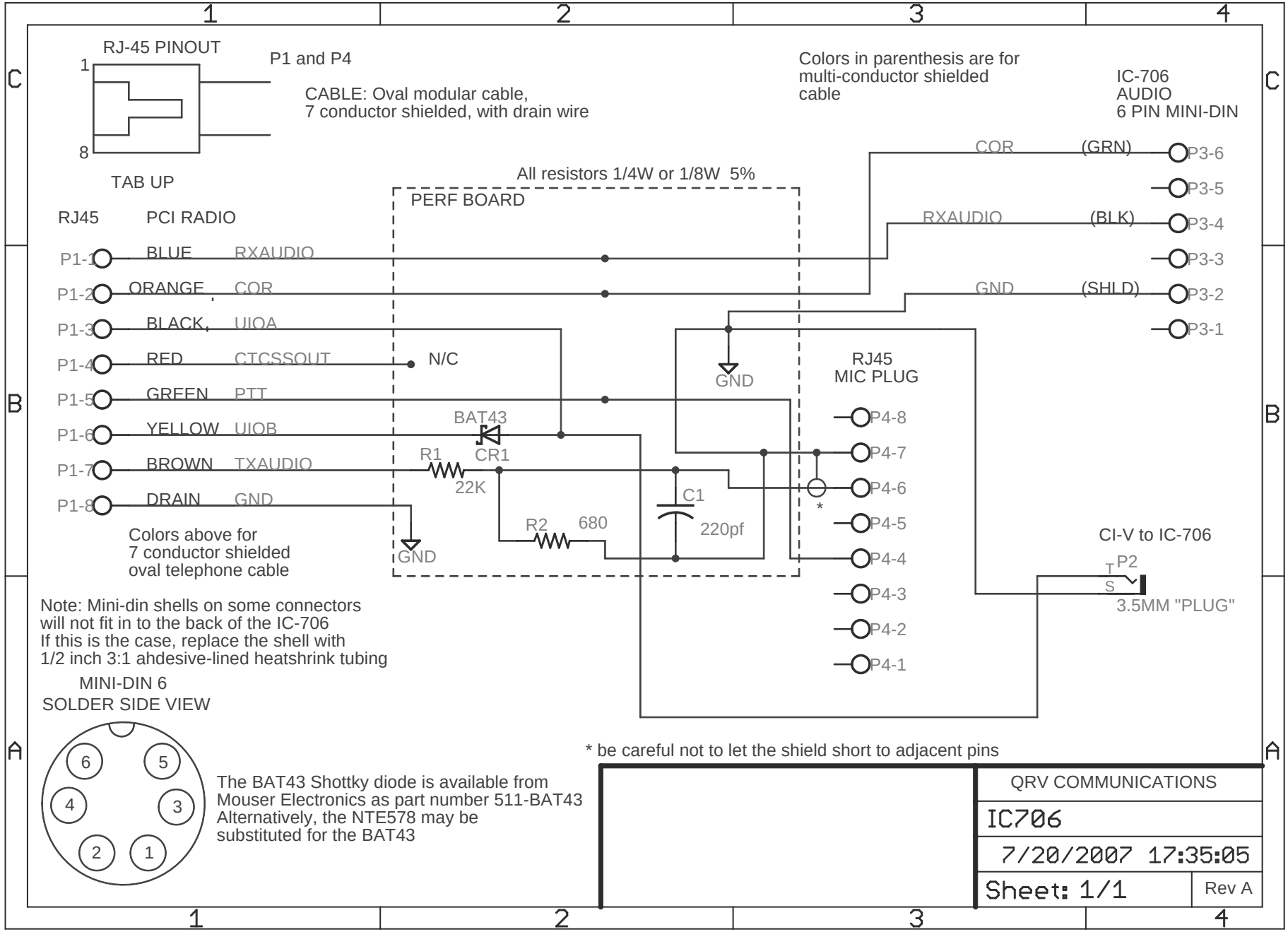
RJ-45 PINOUT
1
8
TAB UP
P1 and P4
CABLE: Oval modular cable,
7 conductor shielded, with drain wire
Colors in parenthesis are for
multi-conductor shielded
cable
IC-706
AUDIO
6 PIN MINI-DIN
All resistors 1/4W or 1/8W 5%
PERF BOARD
RJ45
PCI RADIO
P1-1 BLUE RXAUDIO
P1-2 ORANGE COR
P1-3 BLACK UIOA
P1-4 RED CTCSSOUT
P1-5 GREEN PTT
P1-6 YELLOW UIOB
P1-7 BROWN TXAUDIO
P1-8 DRAIN GND
N/C
GND
BAT43
R1
CR1
22K
R2
680
C1
220pf
GND
Colors above for
7 conductor shielded
oval telephone cable
COR (GRN) P3-6
P3-5
RXAUDIO (BLK) P3-4
P3-3
GND (SHLD) P3-2
P3-1
RJ45
MIC PLUG
P4-8
P4-7
P4-6
P4-5
P4-4
P4-3
P4-2
P4-1
*
CI-V to IC-706
P2
T
S
3.5MM "PLUG"
Note: Mini-din shells on some connectors
will not fit in to the back of the IC-706
If this is the case, replace the shell with
1/2 inch 3:1 ahdesive-lined heatshrink tubing
MINI-DIN 6
SOLDER SIDE VIEW
6
5
4
3
2
1
The BAT43 Shottky diode is available from
Mouser Electronics as part number 511-BAT43
Alternatively, the NTE578 may be
substituted for the BAT43
* be careful not to let the shield short to adjacent pins
QRV COMMUNICATIONS
IC706
7/20/2007 17:35:05
Sheet: 1/1
Rev A