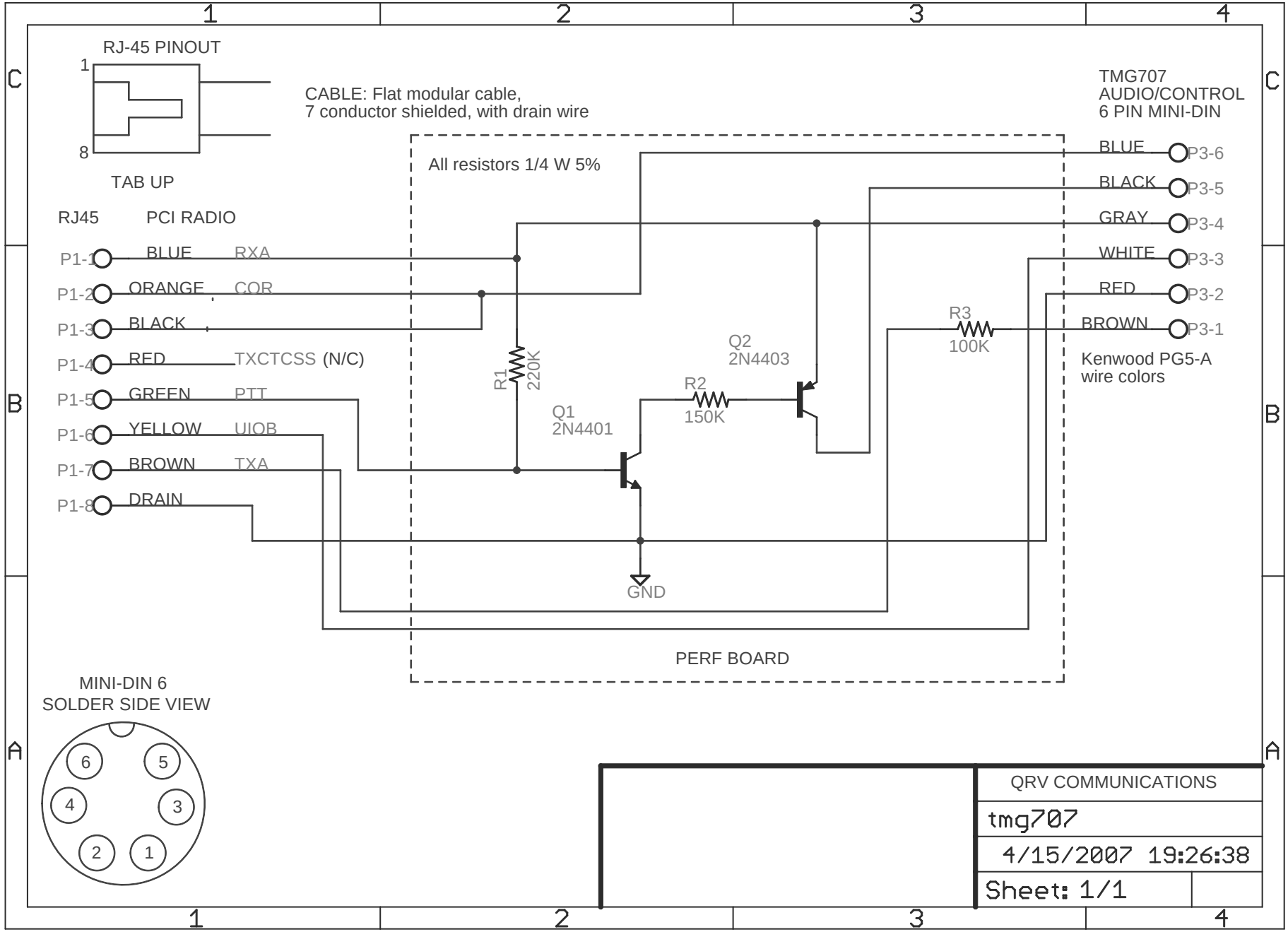
RJ-45 PINOUT
1
8
TAB UP
CABLE: Flat modular cable,
7 conductor shielded, with drain wire
All resistors 1/4 W 5%
TMG707
AUDIO/CONTROL
6 PIN MINI-DIN
BLUE P3-6
BLACK P3-5
GRAY P3-4
WHITE P3-3
RED P3-2
BROWN P3-1
Kenwood PG5-A
wire colors
RJ45
PCI RADIO
P1-1 BLUE RXA
P1-2 ORANGE COR
P1-3 BLACK
P1-4 RED TXCTCSS (N/C)
P1-5 GREEN PTT
P1-6 YELLOW UIOB
P1-7 BROWN TXA
P1-8 DRAIN
R1
220K
R2
150K
R3
100K
Q1
2N4401
Q2
2N4403
GND
PERF BOARD
MINI-DIN 6
SOLDER SIDE VIEW
6
5
4
3
2
1
QRV COMMUNICATIONS
tmg707
4/15/2007 19:26:38
Sheet: 1/1